REV.	ECN NO.	Revision record	Date

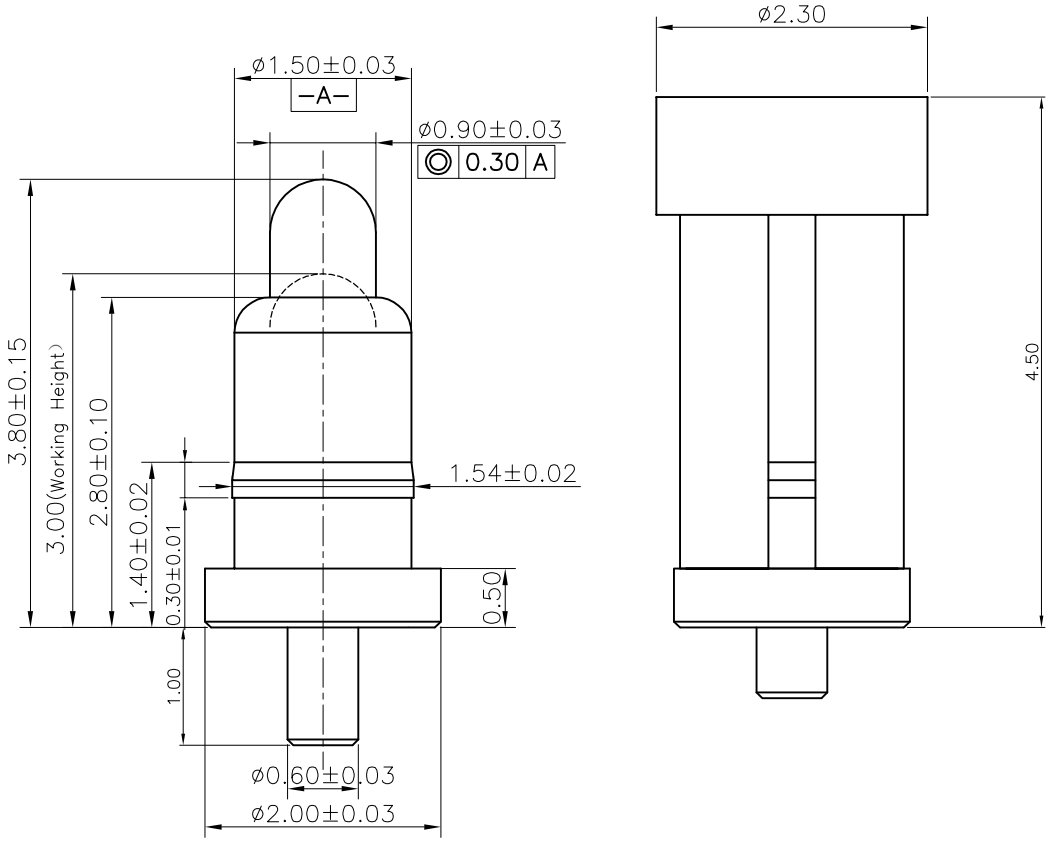

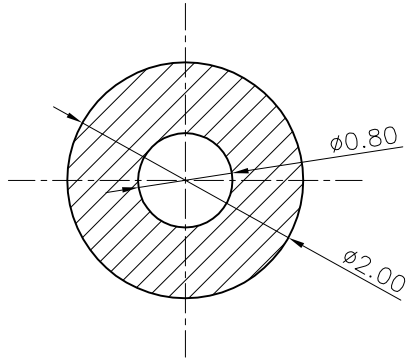

Recommended PCB Layout

Notes:

1 Mechanical performance
  Working Height Force: 26±10gf
  Durability:10000 Cycles
2 Electrical performance
  Current rating:1.0A
  Voltage rating: 12VAC/DC
  Dynamic Resistance:200mOhm Max.
3 Environmental performance
  RoHS & HF compliant.
  Salt Spray: 48h Min
  Operating Temperature range:-40℃~+85℃
4 Packaging:
  Carrier tape

Item	Part Name	Q'TY	Material	Finish
4	CAP	1	High temp Plast UL94 V-0	Black
3	Body	1	Leaded-free-Brass	Au plating 5u" min over NI plating 50-100u" min
2	Plunger	1	Leaded-free-Brass	Au plating 10u" min over NI plating 50-100u" min
1	Spring	1	Stainless steel wire	Au plating 1u" min over NI plating 50-100u" min

UNLESS OTHERWISE SPECIFIED
DIMENSION ARE IN MILLIMETERs
TOLERANCE ARE :
FRACTION DECIMALs ANGLEs

.X ±0.15
.XX ±0.10
.XXX ±0.05

X° ±2.0°
.X° ±1.5°
.XX° ±1.0°

Scale: 1:1

Unit: mm

Shenzhen Chunni Electronics Co. Ltd.

DRAWN	Adrew	Title:	Pogo PIN
CHECKED	Adrew	Part NO:	CNH15038-0105
APPROVED		Customer NO:	NA
CONFIDENTIAL		Page: 1/1	Rev: 01