REV.	ECN NO.	Revision record	Date

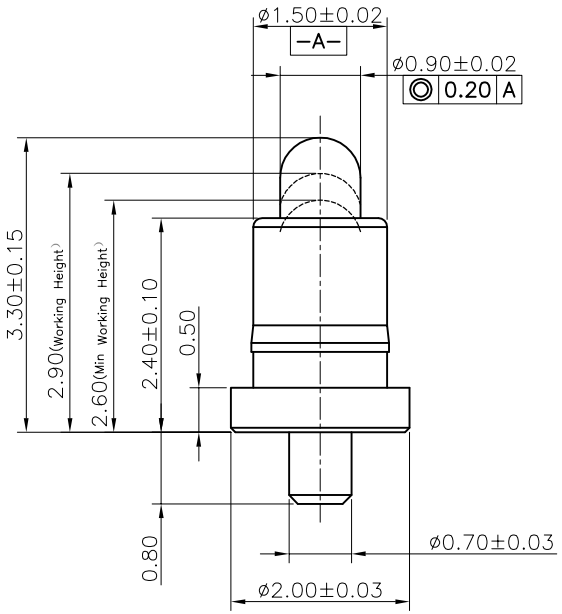

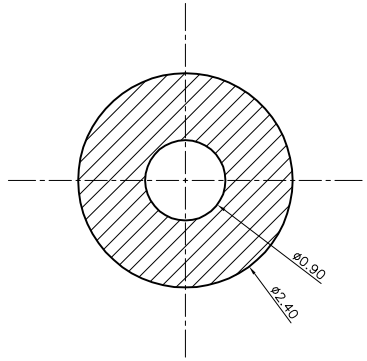

Recommended PCB Layout

Notes:

1 Mechanical performance
- Working Height Force: 30±10gf
- Durability:50000 Cycles

2 Electrical performance
- Current rating:1.0A
- Voltage rating: 12VAC/DC
- Dynamic Resistance:100mOhm Max.

3 Environmental performance
- RoHS & HF compliant.
- Salt Spray: 48h Min
- Operating Temperature range: −40°C~+85°C

4 Packaging:
- Carrier tape

Item	Part Name	Q'TY	Material	Finish
4	CAP	1	High temp Plast UL94 V−0	Black
3	Body	1	Leaded Brass	Au plating 3u" min over NI plating 50−100u" min
2	Plunger	1	Leaded Brass	Au plating 3u" min over NI plating 50−100u" min
1	Spring	1	Stainless steel wire	NA

UNLESS OTHERWISE SPECIFIED
DIMENSION ARE IN MILLIMETERs
TOLERANCE ARE :
FRACTION DECIMALs ANGLEs

.X ±0.15
.XX ±0.10
.XXX ±0.05

X° ±2.0°
.X° ±1.5°
.XX° ±1.0°

Scale: 1:1

Unit: mm

Shenzhen Chunni Electronics Co. Ltd.

DRAWN	Adrew	Title:	Pogo PIN
CHECKED	Adrew	Part NO:	CNH15033-0076
APPROVED		Customer NO:	NA
CONFIDENTIAL		Page: 1/1	Rev: 01